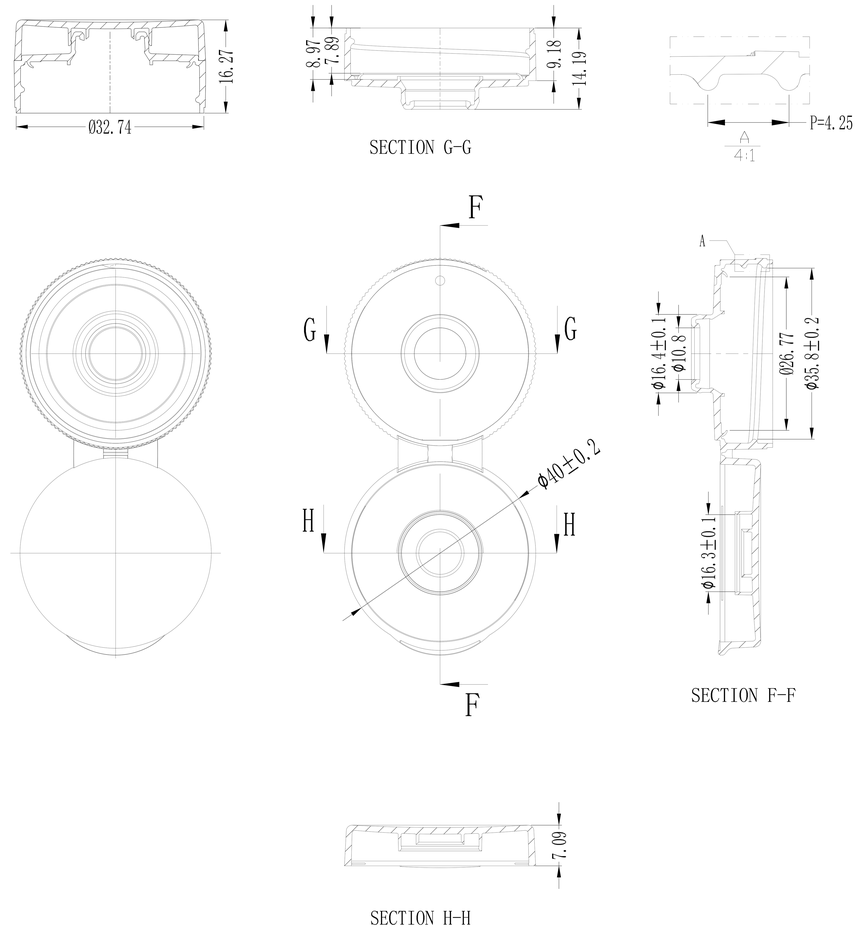

技术要求：

1、产品结构完整、成型饱满；
2、表面光滑、无变形、划痕、收缩、气泡、披锋、缺损；
3、色泽均匀、无色差；
4、外观无污染、异味油污等。

MARK	QUANTITY	DATE

NO.	DESIGNATION	DIMENSION	QTY'	MATERIAL	REMARK
*	*	*	*	*	

DO NOT SCALE DRAWING
THIRD ANGLE PROJECTION

PRODUCT NAME: 38-400传统盖			PART NO:	
OTHERWISE STATED	MODEL NO: ***	DATE	MATERIAL	PP
1-5mm ±0.20mm 5-10mm ±0.25mm 10-20mm ±0.30mm 20-30mm ±0.35mm 30mm以上±0.40mm	DRAWN BY:		SHRINKAGE	***
	CHECKED BY:		SCALE	
	APPROVED BY:		SHEET 1 OF 1	
UNIT: mm	A4	CAD FILE:		REV: 00